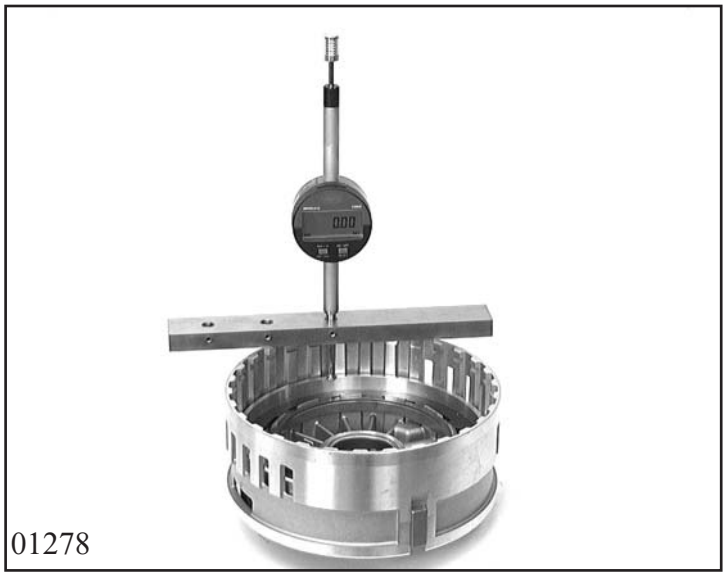
01278

### 1.4.1 Clearance setting, brake C (snap ring)

Determine space requirement $\mathbf{E_C}$ for brake C with measuring bar 5p01 000 330.
To do this, place measuring bar 5p01 000 330 on cylinder edge of brake C.
Place measuring base on the topmost point on the disk supporting area at the piston and set dial gauge to “0”.
Pull measuring sensor upwards, insert into snap ring groove and press against the top edge of the groove.

Read measured value off at dial gauge ⇨ $\mathbf{W_C}$

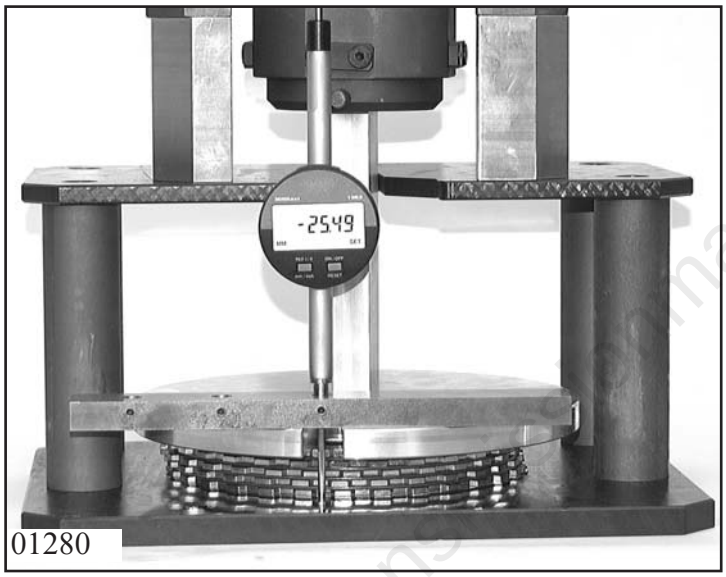

01280

Determine thickness $\mathbf{M_C}$ of brake C clutch pack according to **Chapter 1.4.0 Measuring clutch pack**.

⇨ $\mathbf{M_C}$

Space requirement $\mathbf{E_C}$ is determined from measured value $\mathbf{W_C}$ plus base thickness **F**. ⇨ $\mathbf{E_C}$

Test value $\mathbf{P_C}$ is determined from space requirements $\mathbf{E_C}$ minus $\mathbf{M_C}$.

Value $\mathbf{P_C}$ should be between 4.37 and 5.77 mm.
**Testing specification 1068 700 099**.
Version ***B***

Select snap ring $\mathbf{S_C}$ with test value $\mathbf{P_C}$.

**Calculation:**
$\mathbf{E_C = W_C + F}$
$\mathbf{P_C = E_C - M_C}$

Clearance $\mathbf{L_C}$ with 5 lining disks should be between 1.38 ◘ 1.83 mm.

Transmissionmanuals.com

**Example (for 1.4.1):**

**F = 1.48 mm (base thickness)**
**$W_C$ = 29.05 mm**
**$M_C$ = 25.49 mm**

**$E_C$ = 29.05 + 1.48**
**= 30.53 mm**
**$P_C$ = 30.53 □ 25.49**
**= 5.04 mm**

**$S_C$ = 3.36 mm**

**$L_C$ = 5.04 □ 3.36**
**⇨ $L_C$ = 1.68 mm**

Transmissionmanuals.com